301Q Series

Brass Integral Bath Tub Drain Assembly

Project Name: _____

Project Number: _____

Fixture #

Specification

Brass Intergral Bath Tub Drain Assembly shall feature a Brass coarse thread strainer with 5/16-18 UNC thread-in crossbar and integral overflow holes with unique vertical weeping channels. Brass fitting accepts a 1-1/2" T.O.E. Tube, Flanged Tailpiece w/Nut and Washer, or a Copper DWV Tailpiece. Clicker® Closure mechanism included.

Certification

C US
Meets UPC

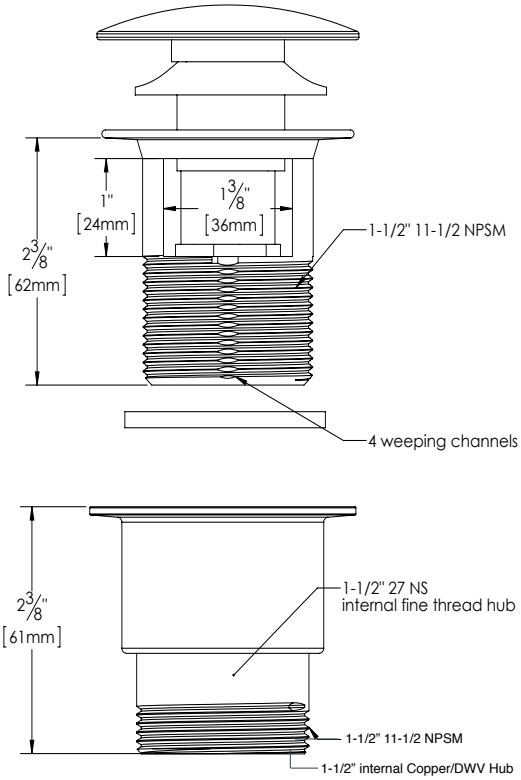

Oakville Stamping and Bending Ltd.
2200 Speers Road, Unit C. Oakville, ON. Canada. L6L 2X8.
T. 905.827.0320 or toll free 1.877.314.6040 F. 905.827.6375 or toll free 1.877.827.6040.

All rights reserved. OS&B™ reserves the right to change product specifications and material or discontinue models without notice.

www.osb.ca (Canada) www.osbplumbing.com (USA)